MORATTO
beyond energy

WIRING SCHEMA

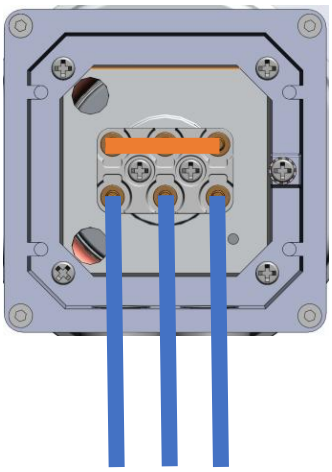

3 x 400V

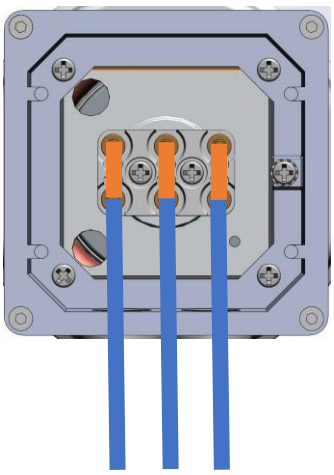

3 x 230V

Screw TCC M3,5x10
Tightening torque 1.9 – 2.2Nm

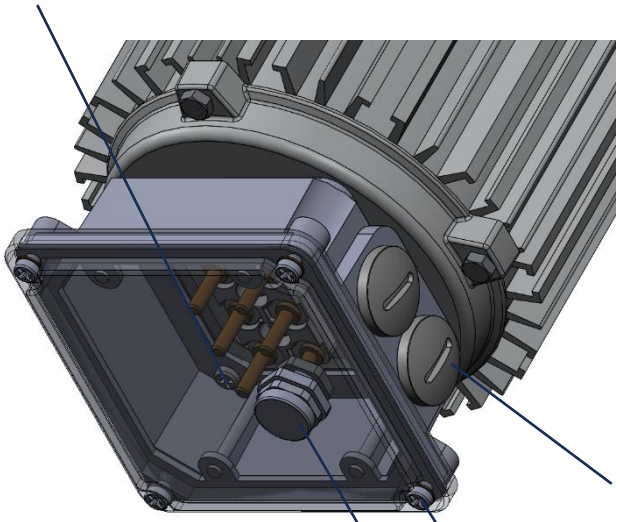



Cable gland
Tightening torque 2.2 – 2.5Nm

BD-MTB M12AI- 120.10 - M12x1,5
Tightening torque 4 – 4.2Nm

Screw TC-CR UNI 7687 M4x16 INOX
Tightening torque 1.9 – 2.2Nm